QUANTUM®

SR40

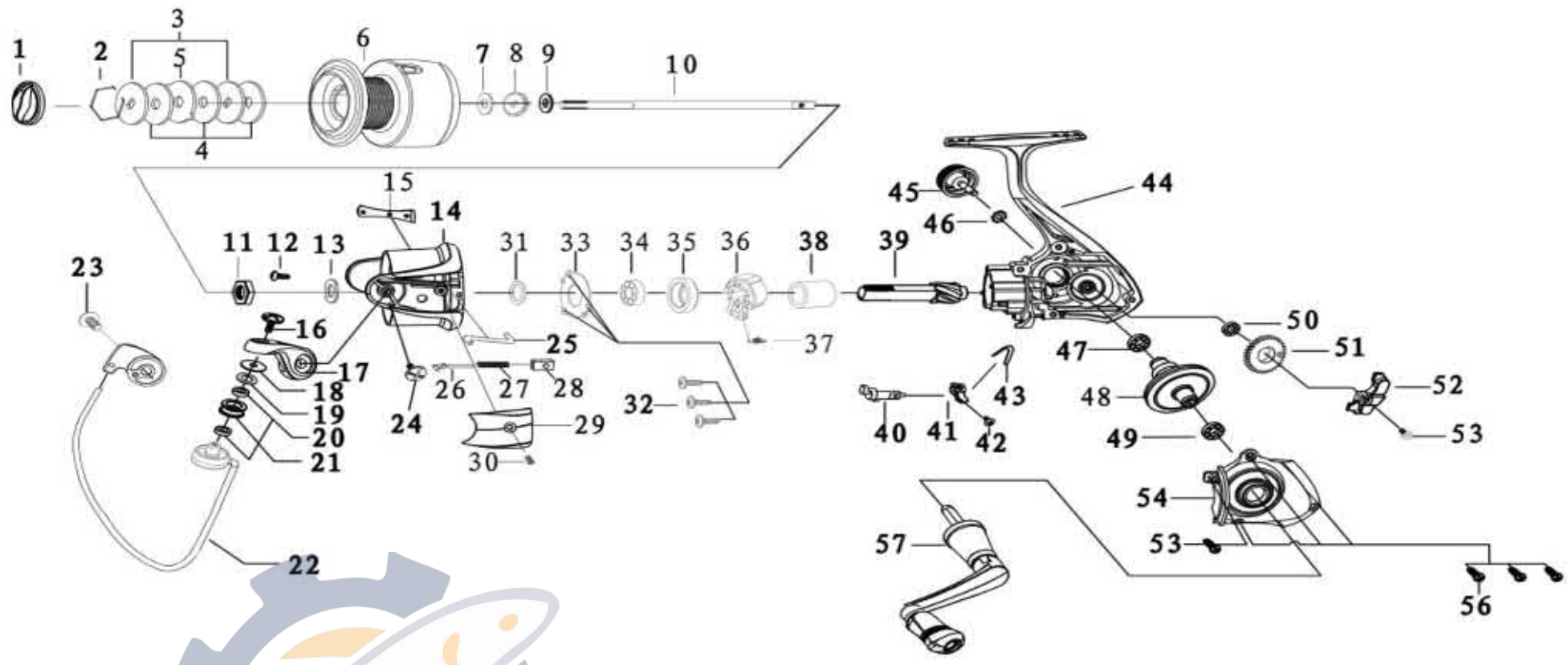

ReelSchematic

Quantum SR40 Part List

Key No.	Description	Part No. SR40	Qty	Key No.	Description	Part No. SR40	Qty
1	Drag Knob Assembly	GAE332-01	1	31	Rotor Washer	FAE110-01	1
2	Spool Retainer	EAE038-01	1	32	Clutch Retainer Screw	EAE057-01	3
3	Drag Washer "D"	EAE080-01	2	33	Clutch Stack Retainer	EAE040-01	1
4	Drag Washer	EAE081-01	3	34	Top Pinion Ball bearing	AAA028-01	1
5	Eared Washer	EAE033-01	1	35	Clutch Bearing Adapter	EAE190-01	1
6	Spool Assembly	HAE320-01	1	36	One Way Clutch Unit	EAE363-01	1
7	Spool Adjust Washer	EAE030-01	1	37	One Way Clutch Spring	EAE216-01	1
8	Clicker Gear	EAE037-01	1	38	Sleeve	EAE139-01	1
9	Spool Clicker Washer	EAE045-01	1	39	Pinion	GAE011-01	1
10	Main Shaft	GAE015-01	1	40	Stopper Cam	GAE090-01	1
11	Rotor Nut	EAE006-01	1	41	Stopper Lever	GAE059-01	1
12	Rotor Nut Lock Screw	EAE094-01	1	42	Stopper Cam Spring	EAE120-01	1
13	Rotor Fasten Shim	EAE110-01	1	43	Stopper Cam Screw	EAE135-01	1
14	Rotor	HAE009-01	1	44	Body Assembly	GAE301-01	1
15	Bail Holder Side Cover	HAE087-01	1	45	Handle Screw Cap	EAE073-01	1
16	Line Roller Screw	EAE108-01	1	46	Toothed lock washer	EAE075-01	1
17	Arm Lever	GAE007-01	1	47	Body ball bearing	AAA028-01	1
18	Line Roller Collar	EAE102-01	1	48	Drive Gear	EAE012-01	1
19	Line Roller Washer	FAE102-01	1	49	Cover ball bearing	TW058-01	1
20	Ball Bearing	CT157-01	2	50	O/S Gear Bearing	EAE158-01	1
21	Line Roller	GAE004-01	1	51	O/S Gear	GAE053-01	1
22	Bail Assembly	HAE347-01	1	52	O/S Gear Screw	NA	1
23	Arm Lever Screw	EAE042-01	1	53	O/S Slider	GAE025-01	1
24	Bail Holder Screw	EAE042-01	1	54	Side Cover Assembly	GAE323-01	1
25	Kick Lever	HAE019-01	1	55	Side Cover Screw	NA	1
26	Actuator Lever	EAE116-01	1	56	Side Cover Screw	FAE085-01	4
27	Actuator Spring	EAE022-01	1	57	Handle Assembly	GAE418-01	1
28	Actuator	EAE031-01	1				
29	Arm Lever Side Cover	GAE087-01	1				
30	Arm Lever Side Cover Screw	EAE077-01	1				